DC SLOT TYPE INDUCTIVE PROXIMITY SENSORS WITH CONNECTOR

5.0mm	5.0mm	10mm
○	○	○
-	-	-
PBT	PBT	PBT
●	●	●
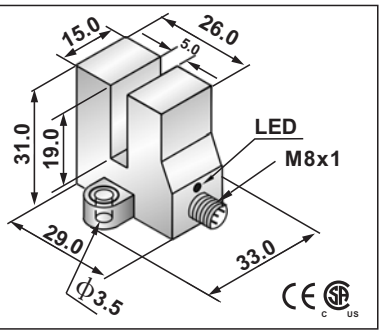	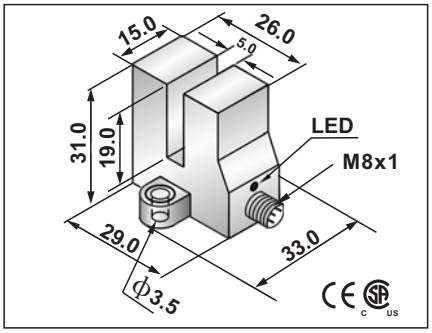	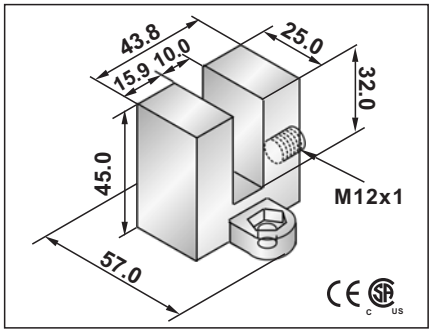
10~60VDC	10~30VDC	10~60VDC
≤10%	≤10%	≤10%
<1.8mA	<10mA	<1.8mA
≤100mA	≤200mA	≤100mA
≤1.8mA	<0.01mA	≤1.8mA
-	-	-
-	-	-
≤6V at 100mA	<1.5V	≤6V at 100mA
2KHZ	2KHZ	1KHZ
Approx. 60% Insert depth	Approx. 60% Insert depth	Approx. 60% Insert depth
-	-	-
<0.01mm	<0.01mm	<0.02mm
IP67	IP67	IP67
−25°C to 70°C	−25°C to 70°C	−25°C to 70°C
-	-	-
15mmx12mmx0.3mm	15mmx12mmx0.3mm	22mmx22mmx0.5mm
Yes	Yes	Yes
Yes	Yes	Yes
120~150mA	220~280mA	120~150mA
RFI>3V/m / EFT>1KV / ESD>4KV (contact)	RFI>3V/m / EFT>1KV / ESD>4KV (contact)	RFI>3V/m / EFT>1KV / ESD>4KV (contact)
IEC 60947-5-2,Part 7.4.1 / IEC 60947-5-2,Part 7.4.2	IEC 60947-5-2,Part 7.4.1 / IEC 60947-5-2,Part 7.4.2	IEC 60947-5-2,Part 7.4.1 / IEC 60947-5-2,Part 7.4.2
	UUP2-U0519N-ACU3 29	
	UUP2-U0519N-BCU3 29	
	UUP2-U0519P-ACU3 30	
	UUP2-U0519P-BCU3 30	
UUP2-U0519C-ACU3 39		UUP2-U1032C-ARU4 38
UUP2-U0519C-BCU3 77		UUP2-U1032C-BRU4 78
Please see Page 18 for details and specifications of DC 2-Wire models on this page.		
approx.59g	approx.59g	approx.59g

Note:
Coming Soon : Part numbers with underline
In Preparation: Part numbers with a line through the middle

DC SLOT TYPE INDUCTIVE PROXIMITY SENSORS WITH CONNECTOR

10mm	15mm	15mm
○	○	○
-	-	-
PBT	PBT	PBT
●	●	●
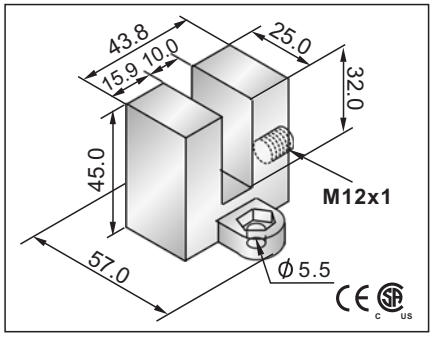	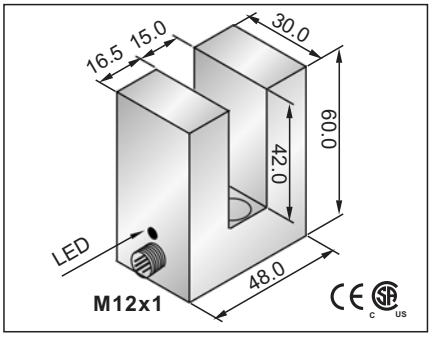	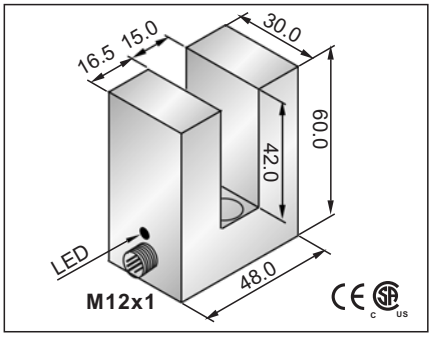
10~30VDC	10~60VDC	10~30VDC
≤10%	≤10%	≤10%
<10mA	≤1.8mA	<10mA
≤200mA	≤100mA	≤200mA
<0.01mA	≤0.8mA	<0.01mA
-	-	-
-	-	-
< 1.5V	≤6V at 100mA	< 1.5V
500HZ	150HZ	500HZ
Approx. 60% Insert depth	Approx. 60% Insert depth	Approx. 60% Insert depth
-	-	-
<0.02mm	<0.02mm	<0.02mm
IP67	IP67	IP67
−25°C to 70°C	−25°C to 70°C	−25°C to 70°C
-	-	-
22mmx22mmx1mm	30mmx30mmx1mm	30mmx30mmx1mm
Yes	Yes	Yes
Yes	Yes	Yes
220~280mA	120~150mA	220~280mA
RFI>3V/m / EFT>1KV / ESD>4KV (contact)	RFI>3V/m / EFT>1KV / ESD>4KV (contact)	RFI>3V/m / EFT>1KV / ESD>4KV (contact)
IEC 60947-5-2,Part 7.4.1 / IEC 60947-5-2,Part 7.4.2	IEC 60947-5-2,Part 7.4.1 / IEC 60947-5-2,Part 7.4.2	IEC 60947-5-2,Part 7.4.1 / IEC 60947-5-2,Part 7.4.2
UUP2-U1032N-ARU4 33		UUP2-U1542N-ARU4 33
UUP2-U1032N-BRU4 34		UUP2-U1542N-BRU4 34
UUP2-U1032P-ARU4 35		UUP2-U1542P-ARU4 35
UUP2-U1032P-BRU4 36		UUP2-U1542P-BRU4 36
UUP2-U1032P-SRU4 38		UUP2-U1542P-SRU4 38
UUP2-U1032N-SRU4 37		UUP2-U1542N-SRU4 37
	~~UUP2-U1542C-ARU4~~ 40	
	~~UUP2-U1542C-BRU4~~ 78	
	Please see Page 18 for details and specifications of DC 2-Wire models on this page.	
approx.68g	approx.100g	approx.100g

Note:
Coming Soon : Part numbers with underline
In Preparation: Part numbers with a line through the middle

DC SLOT TYPE INDUCTIVE PROXIMITY SENSORS WITH CONNECTOR

30mm	30mm	30mm
○	○	○
-	-	-
PBT	PBT	PBT
●	●	●
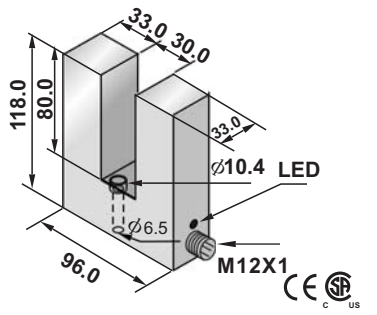	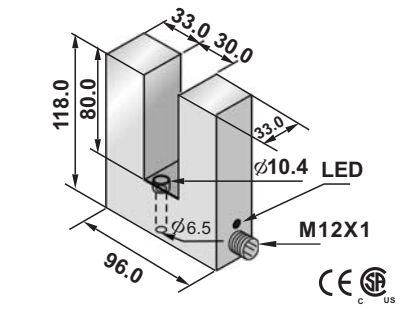	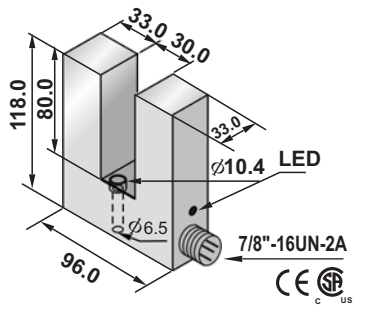
10~60VDC	10~30VDC	10~30VDC
≤10%	≤10%	≤10%
≤1.8mA	<10mA	<10mA
≤100mA	≤200mA	≤200mA
≤1.8mA	<0.01mA	<0.01mA
-	-	-
-	-	-
≤6V at 100mA	<1.5V	<1.5V
150HZ	150HZ	150HZ
Approx. 60% Insert depth	Approx. 60% Insert depth	Approx. 60% Insert depth
-	-	-
<0.02mm	<0.02mm	<0.02mm
IP67	IP67	IP67
−25°C to 70°C	−25°C to 70°C	−25°C to 70°C
-	-	-
45mmx45mmx1mm	45mmx45mmx1mm	45mmx45mmx1mm
Yes	Yes	Yes
Yes	Yes	Yes
120~150mA	220~280mA	220~280mA
RFI>3V/m / EFT>1KV / ESD>4KV (contact)	RFI>3V/m / EFT>1KV / ESD>4KV (contact)	RFI>3V/m / EFT>1KV / ESD>4KV (contact)
IEC 60947-5-2,Part 7.4.1 / IEC 60947-5-2,Part 7.4.2	IEC 60947-5-2,Part 7.4.1 / IEC 60947-5-2,Part 7.4.2	IEC 60947-5-2,Part 7.4.1 / IEC 60947-5-2,Part 7.4.2
	UUP2-U3080N-ARU4 33	UUP2-U3080N-AZU4 41
	UUP2-U3080N-BRU4 34	UUP2-U3080N-BZU4 42
	UUP2-U3080P-ARU4 35	UUP2-U3080P-AZU4 43
	UUP2-U3080P-BRU4 36	UUP2-U3080P-BZU4 44
	UUP2-U3080P-SRU4 38	UUP2-U3080P-SZU4 46
	UUP2-U3080N-SRU4 37	UUP2-U3080N-SZU4 45
~~UUP2-U3080C-ARU4~~ 40		
~~UUP2-U3080C-BRU4~~ 78		
Please see Page 18 for details and specifications of DC 2-Wire models on this page.		
approx.280g	approx.280g	approx.280g

Note:
Coming Soon : Part numbers with underline
In Preparation: Part numbers with a line through the middle